AIREFRIG AUSTRALIA

2026

Enthalpy

Condensing Units

QUICKCOMMISSIONINGSHEET

Contents

1. Introduction 2
2. Instruction of Operating Personnel 2
3. AS/NZS 5149.3 2
4. Unit location 2
5. Mounting 3
6. Pressure Testing 3
7. Evacuation 3
8. Initial Checks 3
9. Commissioning 4
10. Fan Speed Controls 5
11. Refrigerant Charging 6
12. Oil Levels 6
13. Unit fitted with Filter Shells 6
14. System in Operation - Superheats and Temperatures 6
15. Prior to Leaving 6
16. Capacity Control Models Fitted With CM-RC 7
17. Carel Universal Controllers 8

1. Introduction

AsEnthalpy unitsare not made for a single point application no items can be factory set.

DO NOT ASSUME ANY SETTING is correct UNTIL CONFIRMED for application.

At all times any paperwork or manufacturer's guides on any item fitted to Enthalpy Condensing Units should be adheredto.

2. Instruction of Operating Personnel

Beforeanew refrigeration system is putinto service, the person responsible for placing the system in operation shall ensure that:

Operating personnel are competent and have been supplied with and have understood the construction, operation, and maintenance of the unit. The system must only be used for the refrigerants authorised.

The Enthalpy Condensing Unit includes technical information.

All fitted equipment is supplied with instructions and information. This can be found supplied with the unit along with refrigerant stickers.

Refrigerant Sticker MUST be placed onto unit indicating the refrigerant for the application. All information must be left in an appropriate accessible point with the unit - refer AS5149.

3. AS/NZS 5149.3

AS/NZS 5149.3:2016 - Refrigerating systems and heat pumps - Safety and environmental

requirements, Part 3: Installation site

AS5149 must be followed when installing, testing, and commissioning unit. This also includes servicing and records.

AS5149-4

An Updated LOGBOOK shall be kept regarding the refrigeration system which records all details of maintenance and repairs, parts replaced, tests and refrigerant use. For further information please refer to AS5149.

4. Unit Location

Unit should be installedinalocation that allows clean airflow.

Place unit at a distance from structures and other units that do not impact airflow.

Guide: Distance should be equal or greater than diameter of first fan and ½ of every other fan addedtogether.

Using higher ambient ratings doesn't compensate for poor airflow.

5. Mounting

Solid,firmandlevel.

Mountingsupports should cover a good portion of the mounting points, so the weight is distributed evenly across the mount.

The use of firm EPDM or rubber type sheet is suggested for steel frames and mounting on concrete.

6. Pressure Testing

Never exceedpressure testing beyond the limits of the compressor, vessel, or piping. As a guide 38bar should be considered the maximum pressure however a lower rated working pressure on **ANY** item takes precedence and **MUST** be used. Note: there are different pressures on both low and high sides of the system.

7. Evacuation

Switch on the oil heater
Open all shut-off valves and solenoid valves
Use a vacuum pump with new oil charge to evacuate the entire system, including the compressor and on the suction and high-pressure sides of the system.
With the vacuum pump shut off a ‘standing pressure’ lower than 500micron should be achieved. (Note: any ice formed, which regularly can occur at normal hot ambient, during the evacuation process requires a vacuum of less than 100micron).
Multiple evacuations are strongly suggested with the use of DRY nitrogen to break the vacuum in between cycles.

DO NOT APPLY any high voltage tests orpower during the evacuation processor compressor may suffer internal damage.

8. Initial Checks

Use 10mm socket. Try to avoid star screw power drivers, over torque can damagecentre of the screws.
When removing Enthalpy TD panels – place panels on their side, not bottom/base.Bottom of panel can bend if pressure is applied.
Tighten ALL case bolts and mounts – remember they have travelled some distance.
Remove compressor hard shipping mounts.
Make sure all electrical compliance testing has been performed. Confirm voltageand phases are correct for unit.
Glanding or electrical penetrations should use factory supplied points. Any extrasuse lower section of electrical panels. Confirm all factory glands are installed correctly.

Tighten ALL electricalconnections –loose connections are nota warranty issue.

Do not leave the unit with partial or full charge un-powered for extended periods, charge migration will occur. Unit setup as pump down or anti-migration is suggested with power left onto the unit in room off mode.

9. Commissioning

Check fans can rotate freely.
Check crankcase heater is working.
Set short cycle timers as needed.
Set ***OVERLOAD*** (supplied from factory set to minimum to assure this is set by contractor)

- o Enthalpy units use an ELECTRONIC overload. Further information is supplied in the unit on this and operation.
- o They provide very accurate protection against loss of phase and overcurrent events.
- o OVERLOADs must be set. These are supplied from factory at MIN overload setting.
- o **NEVER** exceed the maximum operating current (MOC) for the compressor or motor.
- o It is recommended that a setting 10% less than MOC is used so effective protection for the compressor is provided. For R134a/R513A these settings may also be able to be further lowered.
- o On larger compressors part winding (PW) start may be installed. These are a 50% / 50% motor setup. i.e. 32amp compressor (Y) is 16amps per winding.
- o The PW timer must be set to **LESS THAN** 0.5sec.
- o The overloads must be set **NO GREATER** than 50% of the MOC each (so that the total of the 2 overloads added never exceeds MOC - suggested is 10% LESS). i.e. 32amp compressor (Y) is 16amps per overload **MAX**. Suggested is 14.4amps.
- o Use Amp Meter or 'tong' tester to check current is well within limits during startup.
- o Set ***pressure controls*** - Recommend using nitrogen during pressure test.

LP set cut in first then diff (cut out) not lower than compressor limits.
As general suggested guide
Medium Temp applications -

- o Cut in -5sst.
- o Cut out -15°C SST/-20°C SST

Low Temp applications

- o Cut in -25°C SST
- o Cut out -38°C SST

- o HP safety - set not higher than compressor limits

As general suggest guide
55°C SCT

If the HP safety wasn't set prior to initial startup using nitrogen during pressure tests; the fan circuit breaker can be switched off to allow the unit to run at higher pressure to set the safety point. - **MUST BE TURNED BACK ON**.

Tighten and check all refrigerant connections - rotalocks, control lines. Recommended also doing the following day. *Refrigerant losses from a loose line connection are not warrantable.*
Set any ***electronic controls*** on unit as needed.

- o Also set room controls - ***strongly*** suggest min run & off times

5min run - 10 mins off time.
4 starts per hour is more than 600 per week.

10. Fan Speed Controls

ForSettingSaginomiya ***FanSpeed control***

- o R404A/R507/R449A – approx. 7-8 marks from left 38°C SCT (guide only)
- o R134a/R513A – approx. 3-4 marks from left 38°C SCT (guide only)

Function

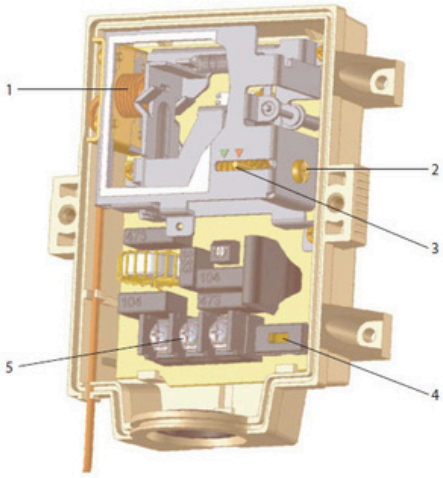

1. Bellows
2. Adjusting screw
3. Range setting pointer (dual marking 11 and 19bar)
4. Change over switch
5. Terminal board

Setting point is increased by turning the range adjusting screw clockwise. It is decreased by turning the screw counter clockwise. Adjustment should be within the range indicated for the setting pointer.

Cut off: Fan motor stops when the pressure decreases below the value Pmin.

Min. Speed: Fan motor operates at the Minimum Speed when the pressure decreases below the value Pmin.

F.V.S = Full Voltage Set Point (pressure setting for maximum speed)
E.P.B = Effective Proportional Band
P_{min} = (F.V.S – E.P.B)

The RGE controls the speed of the condenser fan in refrigeration and air conditioning units that work all year long.

It keeps the condensing pressure at a steady level by changing the speed of the fan according to the required condensing pressure.

Single-phase type

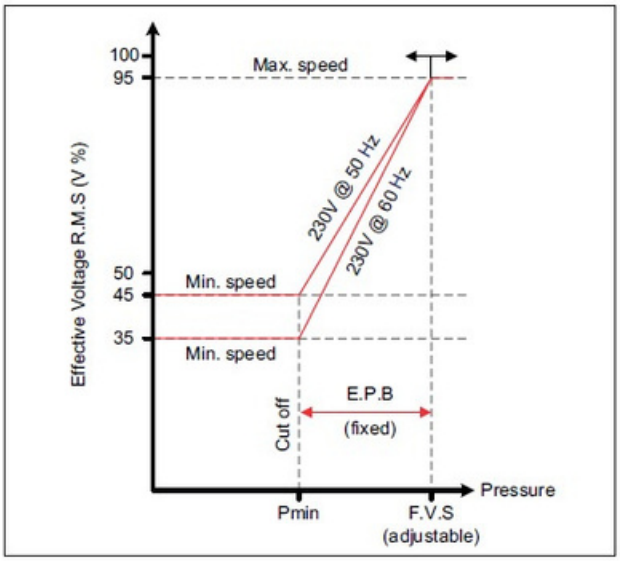

ForSetting EC fans - done via Carel Universal-refer to rear section.
Fans will require adjustment; it is recommended not to make setting and differential too narrow or erratic fanoperation will result.

11. Refrigerant Charging

Thecharge can be confirmed with the unit sight-glass indicator and subcooling on the liquid.

Initial charge should be placed into the liquid line and receiver with TOP up done via the suction line with liquid; ONLY when the compressor is running.
Note that with non-azeotropic refrigerants that some ‘bubbles’ may be present if there is not sufficient subcooling to be below bubble point conditions for your refrigerant.

12. Oil Levels

Beforestartupandonce compressor is running

- Confirmoillevels are appropriate.
- The compressors and oil separator are supplied with oil charge. Bitzer compressors are suppliedtotop of sight glass - short piping runs may require oil removal.
- *Un-approved oils will void compressor warranties*

13. Unit fitted with Filter Shells

Unitmodelsthatare supplied with ***FilterShells*** – if cores are fitted (labels will indicate this).

Theseare required to be fitted and evacuated prior to system start-up.

14. System in Operation - Superheats and Temperatures

Superheats should be measured and monitoredduring startup and once equipment is at running conditions. Recommend measurements at unit inlet to determine if within suitable application limits.

- High suction superheat MAY be an indication of incorrect valve settings.
- Superheat is **not able to be determined visually**, appropriate temperature measurement and pressure equipment is required.
- Superheats and temperature limits MUST be kept within envelopes.
- High suction superheats will result in excessive discharge temperatures, voiding warranty.
- Discharge temperatures should be confirmed acceptable.

15. Prior to Leaving

Alllids, screws and barriers are to be reinstalled after commissioning. The case bolts should be confirmed for tightness to avoid any vibration.
Make sure no bolts or screws are missing.

16. Capacity Control Models Fitted With CM-RC

Units fitted with CRII and CM-RC **WILL** require the Bitzer BEST app for correct operation.

Adjustment of the CRII system and pressure controller to the site conditions will be required.

The factory settings are only setup to allow start-up and **WILL NOT** suit all installations.

TIME AND DATE WILL NEED TO BE SETUP for your local time.

The CM-RC-01 module has several built-in functions to protect, diagnose, control and communicate the status of the compressor. Some basic module setups related to the compressor and refrigerant type must be entered to enable all available protection functions.

- This is done with the BITZER BEST Software that can be downloaded from the BITZER homepage, www.bitzer.de.

The BEST Software is used for live monitoring of operating conditions, download of datalogs & configuration of the CM-RC-01 module.

The CM-RC-01 module has a short-cycling warning to protect the motor windings. The module will give a warning if the compressor is started too many times within 1 hour, but the compressor ***will not be locked***. **THIS MUST BE CHECKED. (Also refer to min off and run times section).**

If the CM-RC-01 module is locked due to a fault an external reset must be performed by either powering off the device for minimum 5 seconds or sending a reset command on the serial bus. If a BEST converter is connected it must be removed during the power-off as the converter will supply power to the module. (Note: faults can also be reset with the app via smartphone/PC)

The CM-RC-01 has a built-in data logger storing operation data, sensor data, alarms & events for analysis using the BEST Software. The data is stored in the data logger flash memory at regular intervals together with counters and statistics data collected and summarised over time.

There are two ways to connect to the CM-RC-01 module:

1. Laptop with Bitzer BEST software – connected via the Bitzer BEST converter USB cable or Bluetooth.
2. Phone with Bitzer BEST app – connected via Bluetooth. **Password for APP: 1300**

Please refer to code: 8760 for previous generations.

((also inside electrical panel)

CM-RC 0-10V for Capacity control is via the Carel Universal Control (refer to below). This will need to be adjusted to suit system.

17. Carel Universal Controllers

Carel IR33E9HR20 & DN33E9HR20 controllers

18.05.19 Compressor CM-RC-01 (CRII) capacity control 10-100% & *Condenser EC fan speed control 0-100% (*when EC fans are applicable)

Code	Parameter	UoM	Type	Carel Default	Enthalpy TD Unit Factory Defaults (LBP R404a)	Suggested R404a MBP Temp Option	Suggested R134a MBP Temp Option
C0	Operating Mode: **Direct Acting**	-	C	2	**1**	**1**	**1**
St1	Set point 1: **CM-RC-01 (CRII) Capacity Control**	psi(g)	C	20	**18**	**55**	**18**
P1	Differential 1: **CM-RC-01 (CRII) Capacity Control**	psi(g)	F	2	**7**	**10**	**5**
St2	Set point 2: **EC Condenser Fans Control** *(if applicable)* (before modifying set "C24" value to 250)	psi(g)	C	40	**176**	**176**	**81**
P2	Differential 2: **Condenser Fans Control** *(if applicable)*	psi(g)	F	2	**99**	**99**	**69**
C13	Probe Type: **(0-5Vdc ratiometric press transducer)**	-	C	0	**14**	**14**	**14**
C15	Minimum value for Sensor 1 (with current/voltage signal) (Pressure Transducer: SPKT0043P0: 0 to 250 psig)	psi(g)	C	0	**0**	**0**	**0**
C16	Maximum value for Sensor 1 (with current/voltage signal) (Pressure Transducer: SPKT0043P0: 0 to 250 psig)	psi(g)	C	100	**251**	**251**	**251**
d15	Minimum value for Sensor 2 (with current/voltage signal) (Pressure Transducer: SPKT0033P0: 0 to 500 psig)	psi(g)	C	0	**0**	**0**	**0**
d16	Maximum value for Sensor 2 (with current/voltage signal) (Pressure Transducer: SPKT0033P0: 0 to 500 psig)	psi(g)	C	100	**500**	**500**	**500**
C19	Function of Sensor 2: **Independent operation (circuit 1 & circuit 2)**	-	C	0	**7**	**7**	**7**
C24	Maximum value of set point 2 **(St2)**	psi(g)	C	110	**250**	**250**	**250**
P26	High alarm threshold on probe 1	-	C	150	**800**	**800**	**800**
P31	High temp. alarm threshold probe 2	-	C	150	**800**	**800**	**800**
C29	Immediate alarm signal E17 - Alarm sent from EC fan(s)	-	C	0	**8**	**8**	**8**
C33	Special operation: **1 = Enabled** (before modifying set "cO" operating mode first)	-	C	0	**1**	**1**	**1**
C34	Output 1 dependence: **Control output (St1,P1)**	-	C	1	**0**	**0**	**0**
C36	Output 1 activation	%	C	-25	**-100**	**-100**	**-100**
C37	Output 1 differential/logic	%	C	25	**+100**	**+100**	**+100**
C38	Output 2 dependence	-	C	1	**2**	**2**	**2**
C40	Output 2 activation	%	C	-50	**+100**	**+100**	**+100**
C41	Output 2 differential/logic	%	C	25	**-100**	**-100**	**-100**
d40	Output 2 Minimum speed	%	C	0	**0**	**0**	**0**
d41	Output 2 Maximum speed	%	C	100	**100**	**100**	**100**
C42	Output 3 dependence	-	C	1	**0**	**0**	**0**
C46	Output 4 dependence	-	C	1	**1**	**1**	**1**
C48	Output 4 activation	%	C	-100	**+100**	**+100**	**+100**
C49	Output 4 differential/logic	%	C	25	**-100**	**-100**	**-100**
d49	Output 2 Maximum speed (optional)	%	C	100	**100**	**100**	**100**
C52	Display (psig): 6= alternating between sensors 1 & 2 0= sensor 1 (LP) / 1= sensor 2 (HP)	-	C	0	**6**	**6**	**6**

Display Alarm Codes: *E01 = Suction transducer fault / E02 = Discharge transducer fault / E17 = EC fan fault*



The **St1** parameter value in psig in the table on the left is the compressor operating set point @ 10% capacity.
The **P1** differential parameter value in psig in the t the left is the compressor operating range.
(St1 + P1 = 100% compressor capacity)

The **St2** parameter value in psig in table on the left is the required condenser fan pressure operation set point min speed/off less 10%. (see *Note below)
The **P2** differential parameter value in psig in the table on the left is the fan operating range
(ST2 + P1 = 100%)

***Note**: St2 setpoint is less 10% due to ebm EC fan having a buit-in offest factor of approximate 10%.

The **St2** & **P2** factory default parameter values in psig in the table on the left will supply the following speeds:
R404a: max speed (100%) @ ≥275 psi
R404a: min speed/fan stop (0%) @ ≤187 psi
R134a: max speed (100%) @ ≥150 psi
R134a: min speed/fan stop (0%) @ ≤90 psi

Note: The Carel display alternates every few seconds between suction & discharge pressures in psig.
(Refer Parameter: C52 for other options)

To Access All Parameters:

PRESS & HOLD "PRG" & "SET" for approx 5 seconds until the display shows 0.

PRESS ARROW "UP" or "DOWN" to enter the password value "77".

PRESS "SET" the first parameter "c0" will be displayed.

(A) PRESS ARROW "UP" or "DOWN" until reaching the required parameter to be viewed or modified.

(B) PRESS "SET" to display the associated value.

(C) PRESS Arrow "UP" or "DOWN" to increase or decrease the value.

(D) PRESS "SET" to temporarily save the value

Note: Repeat the operations A to D to set other parameters.

(E) **PRESS & HOLD "PRG"** for 5 seconds to